versatile

ComfoAir 70

Technical specification for decentralised comfort ventilation unit

General

Zehnder ComfoAir 70 is a decentralised comfort ventilation unit with heat and humidity recovery using synchronous supply and extract air operation. It is often used in apartment renovations as well as in new residential builds. The comfort ventilation unit is particularly suited for one- and two-room apartments, vacation and student apartments.
An additional room can be connected to the adjoining room connections for supply or extract air using Zehnder air distribution (optional). An enthalpy exchanger, which ensures a high degree of heat and humidity recovery, is standard on the unit, which has a positive effect on the room humidity and therefore provides a comfortable indoor climate.
Zehnder ComfoAir 70 can be installed with various outside wall hoods or a reveal module for almost invisible integration of the external and exhaust air ducts in the window reveal.

ComfoAir 70
with white aluminium outside wall panel

ComfoAir 70
with plastic outside wall panel

ComfoAir 70
with stainless steel outside wall panel

ComfoAir 70
with reveal module

Zehnder ComfoLED electronic control panel

* Depending on the unit configuration chosen.
Detailed information on page 6.

Benefits

- Exceptionally good indoor climate, high energy efficiency and maximum hygiene due to washable enthalpy exchanger
- Quiet operation for maximum living comfort, even in inner-city residential areas, due to high-quality radial fans and good insulation, which ensure excellent acoustic protection values (standard sound level difference up to 46 dB)
- Maximum climate comfort thanks to synchronous supply air/extract air operation for continuous heat and humidity recovery and demand control using optional humidity, CO_2 and VOC sensor boards
- Maximum flexibility in planning thanks to optional components such as adjoining room connection, reveal module and sensor control
- Simple and quick installation with minimal intrusion into the living space
- Attractive and discreet appearance: The plastic outside wall panel can be painted over to match the colour of the wall. Alternatively, if the reveal module is used, the outside and exhaust air ducts disappear almost invisibly into the window reveal, so that the appearance of the facade is not affected
- Clean operation, as no condensate disposal is necessary due to the enthalpy exchanger
- Intuitive and extended operating convenience due to integrated control panel and/or external control panel Zehnder ComfoLED

Technical data

Zehnder ComfoAir 70	
Unit dimensions Inside wall panel (W x H x D) outside wall panel (W x H x D)	 440 x 660 x 145 mm 380 x 376 x 50 mm
Outside wall thickness	Min. 275 to 900 mm
Wall mounting pipe	Ø 250 mm Length 600 mm (optionally 900 mm)
Core hole drilling	Ø approx. 270 mm
Fans	DC radial fan
Filter class	Supply/extract air ISO Coarse ≥ 70% (G4) (optionally supply air ISO ePM10 ≥ 60% (F7))
Heat emitter	Cross-counterflow enthalpy exchanger
Casing	Powder-coated aluminium, RAL 9016, fine structure, matt
Unit core	Expanded polypropylene (EPP)
Electrical connection	230 VAC/50–60 Hz
Max. current draw	0.15 A
Power consumption	4 W to 17 W (standby: < 1 W)
Protection class	II (protective insulation)
Degree of protection	IP20
Volume flow	15 - 25 - 40 - 60 m^3/h
Energy efficiency	Up to 90% heat recovery Up to 84% humidity recovery
Weight	22 kg (unit) / 3.8 kg (reveal)

Zehnder ComfoAir 70	
Application	-20 °C to 40 °C
Frost protection	From -5 to -15 °C, unit then switches to standby mode
Control	4 fan speeds, standby, filter and fault message, shutters seal automatically in standby mode, optional sensor control by means of humidity, VOC and CO_2 sensor
Leakage (in acc. with DIN 13141 Part 8 – 2006)	Internal: 0.1% External: 0.9%

Energy figures

DiBT	
Product	Zehnder ComfoAir 70 and ComfoAir 70 with adjoining room connection
Approval number	Z-51.3-396
Extract air volume flow V_{ab} [m³/h]	15 ≤ V˙Ab ≤ 60
Heat recovery efficiency η_{WRG} [-]	72%
Specific electric power consumption p_{el} [W/(m³/h)]	0.21

"Passivhaus" certification	
Component ID	0826vs03
Application [m³/h]	20 - 40
Heat recovery efficiency η_{WRG} [-]	85%
Specific electric power consumption $p_{el,spec}$ [W/(m³/h)]	0.24
Humidity recovery ηX [-]	64%

EU Energy Consumption Label	
Energy efficiency class	A*
Maximum air volume flow [m³/h]	50–60
Sound power level L_{WA} [dB(A)]	34–47

* Depending on the unit configuration chosen.

Detailed information on page 6.

Article numbers

Description	Article number
Zehnder ComfoAir 70, white aluminium outside wall panel, without wall installation tube	527 007 230
Zehnder ComfoAir 70, plastic outside wall panel, without wall installation tube	527 007 240
Zehnder ComfoAir 70, stainless steel outside wall panel, without wall installation tube	527 007 250
Zehnder ComfoAir 70 with built-in humidity sensor board, plastic outside wall panel, without wall mounting pipe	527 008 780
Zehnder ComfoAir 70 for installation with reveal module, without outside wall panel and wall mounting pipe	527 008 590

Accessories	Article number
Reveal module for ComfoAir 70	527 008 670
Round wall mounting pipe made of plastic, Ø 250 mm, length = 600 mm	527 005 200
Round wall mounting pipe made of plastic, Ø 250 mm, length = 900 mm	527 009 120
Square wall mounting pipe made of EPP, 268 x 268 (W x H), length = 600 mm	527 005 800
Extension set for ComfoAir 70, made of EPP, external diameter 250 mm, length = 300 mm	527 009 140
Sealing tape for Zehnder ComfoAir 70, for an adjoining room connection	521 000 580
Zehnder ComfoLED electronic control panel	527 007 290
Humidity sensor board	527 007 260
Humidity and VOC sensor board	527 007 270
Humidity and CO_2 sensor board	527 007 280
Filter set for Zehnder ComfoAir 70 ISO Coarse ≥ 70% (G4) (contents 2 pieces)	527 005 180
Filter set for Zehnder ComfoAir 70 ISO Coarse ≥ 70% / ISO ePM10 ≥ 60% (G4 / F7) (contents 2 pieces)	527 005 190
Filter set for Zehnder ComfoAir 70 ISO Coarse ≥ 70% (G4) (contents 10 pieces)	527 005 160
Filter set for Zehnder ComfoAir 70 ISO Coarse ≥ 70% / ISO ePM10 ≥ 60% (G4 / F7) (contents 10 pieces)	527 005 170

Scope of delivery

To install Zehnder ComfoAir 70 into the wall, a wall mounting pipe is required, which must be ordered separately. The unit is delivered ready to install with the chosen outside wall panel and power supply for a 230 VAC connection. For installation of Zehnder ComfoAir 70 with reveal module, the unit must be ordered without outside wall panel and wall mounting pipe. The reveal module with fixed round wall mounting pipe (length = 580 mm) for Zehnder ComfoAir 70 with external wall grilles must be ordered separately.

Level of efficiency

The generously proportioned enthalpy exchanger, the core of the ventilation unit, functions particularly energy-efficiently. It uses both the sensitive and the latent energy in the extract air. Heat recovery of up to 90% and humidity recovery of up to 84% are possible. Using humidity recovery, the unit functions at temperatures as low as -5 °C without the need for a pre-heater or frost protection. This also saves energy and provides a comfortable indoor climate.

Fans

Supply and extractor fans are driven by energy-efficient EC direct-current motors. The radial fans are resistant to wind loads. The unit operates very quietly due to the arrangement of the fans in the wall opening and the use of a special insulation material. The fans can be set to any of four speeds.

Filters

Standard equipment on ComfoAir 70 includes supply and extract air filters ISO Coarse ≥ 70% (G4).
After the expiry of a certain interval, an indicator on the control panel indicates that the filter must be replaced. The filters should then be replaced as soon as possible. A Class ISO ePM10 ≥ 60% (F7) pollen filter can be installed in the supply air inlet as an option.

Installation

The comfort ventilation unit is installed in an outside wall. No condensate forms in the unit, therefore there is no condensate drain. The facade of the house always remains clean and dry, as no dirt can form due to condensate dripping down.
Installation of the unit is quick and easy. A round wall mounting pipe is available, which is inserted into the core hole of the outside wall during renovations. For new buildings, a square wall mounting pipe can be walled in as an alternative. The Zehnder ComfoAir 70 is then inserted from inside the room and screwed into place. A 230 VAC mains power supply is connected behind the wall mounting system of the unit. After the insulated tube is adjusted, the weather-resistant outside wall panel is fixed to the outside wall. It is that easy to install the unit and have it ready for operation without great intrusion into the living space.
In addition, the outside and exhaust air can be ducted via the window reveal. A reveal module, which is integrated into the thermal insulation composite system, is available for this purpose.

Operation

The built-in control panel on the front of the unit facilitates easy, uncomplicated operation of the Zehnder ComfoAir 70 comfort ventilation unit. By briefly pressing the plus/minus buttons, 4 fan speeds can be set or the unit can be switched to standby mode. Fault messages are displayed and an indicator lets you know when it is time to replace the filter. The automatic function can be set by briefly pressing the plus button from fan speed 4. Visualisation is implemented by a separate LED. In standby mode, the built-in shutters automatically seal off the outdoor and exhaust air openings on the ventilation unit.

The comfort ventilation unit has automatic frost protection. The optional external Zehnder ComfoLED electronic control panel allows Zehnder ComfoAir 70 to be conveniently operated remotely. The functions of the external electronic control panel correspond to those on the integrated control panel. If an external control panel is installed, the internal control panel supplied as standard remains fully functional. As an option, sensor boards to control humidity, VOC or CO_2 can also be used. In the automatic function, the ventilation unit's control panel checks the measurement results of the sensors and controls the unit's fan speeds to ensure maximum living comfort.

Maintenance

Routine maintenance of Zehnder ComfoAir 70 is easy to carry out and should be performed regularly to keep the ventilation unit operating in a flawlessly hygienic manner. After the cover is removed, the filters can be pulled out of the housing without tools. The enthalpy exchanger can be removed from the housing after the upper insulation element is taken off. The enthalpy exchanger can be washed out with water. Please see the user manual for information about servicing tasks.

Frost protection

Using the enthalpy exchanger for humidity recovery, the unit functions at temperatures as low as -5 °C without the need for a pre-heater. Should the outside temperature fall below that level, frost protection is activated to regulate the supply of cold outdoor air. If the outside temperature falls further, the unit switches to standby mode at -15 °C. Unit operation is regulated by a temperature sensor. The unit begins to work automatically when the outside temperature rises again. Frost protection prevents the unit from freezing.

Adjoining room connection

Adjoining room connections (optional) can be mounted on the back (in-wall) or on the side of Zehnder ComfoAir 70. An additional room is connected to the supply or extract air with joining piece ComfoTube 90 flat 51 and thus integrated into the ventilation system. In order to minimise pressure losses, distances should be kept to a minimum. For instance, the unit can be installed in the bathroom and fresh air supplied to the living or sleeping areas. The unit emits no noise in the living/sleeping areas and the rooms are optimally supplied with fresh air.

Tender specification

Zehnder ComfoAir 70 is a decentralised, compact comfort ventilation unit with heat recovery and a large enthalpy exchanger. The ventilation unit is perfectly suited for use in the renovation of one- and two-room apartments, student and vacation apartments, and for new builds. The housing is made of powder-coated aluminium and is designed without thermal bridges. The interior lining is made of expanded polypropylene (EPP) to provide heat and sound insulation.
The outside wall panel is made of high-quality plastic and can be painted over to match the colour of the wall. Alternatively, the outside wall panel is available in stainless steel and white aluminium.
In addition, the outside and exhaust air can be ducted via the window reveal. A reveal module, which is integrated into the thermal insulation composite system, is available for this purpose.
Radial fans with direct-current motors are particularly resistant to wind loads and allow economical operation with a high degree of electrical efficiency. Supply and extractor fans can be controlled separately and, in connection with an adjoining room connection, can be precisely adjusted to the balance air volume.
The core of Zehnder ComfoAir 70 is its generously proportioned plastic cross-counterflow enthalpy exchanger. With heat recovery of up to 90% and humidity recovery of up to 84%, it ensures the maximum in energy recovery. No condensate forms in the unit. It functions at temperatures as low as -5 °C without the need for a pre-heater or frost protection.
The unit is controlled by means of a built-in control panel on the front of the unit. Four fan speeds, the automatic function and standby mode can be set. The display shows fault messages and lets you know when it is time to replace the filter. The ventilation unit can also be controlled remotely with the optional ComfoLED control panel.
Zehnder ComfoAir 70 is delivered ready to connect to the 230 VAC mains power supply with outside wall panel.
The wall mounting pipe must be ordered separately (not required for the reveal module).

As standard, Zehnder ComfoAir 70 is suitable for wall thicknesses up to 600 mm. For wall thicknesses greater than 600 mm, an extension set (length = 300 mm) is optionally available in combination with a round wall mounting pipe (length = 900 mm).
The filters are located at the front and can be easily replaced by the user without tools after removing the cover.
Zehnder ComfoAir 70 is mounted on the inner side of an outside wall and vents outdoor and exhaust air directly via an insulated wall tube.

Control possibilities:

- Four fan speeds, manual selection
- Automatic function can be selected
- Automatic frost protection
- Automatic shutter fastener
- Time-controlled filter replacement indicator
- Fault indicator

Options

- Pollen filter of filter class ISO ePM10 ≥ 60% (F7)
- Plastic, white aluminium and stainless steel outside wall panel
- Reveal module for ducting the outside and exhaust air in the window reveal
- Adjoining room connection for supply or extract air
- Round wall installation tube, made of plastic, Ø 250 mm, length = 600 mm, with 2 blanking plugs, for retrofitting
- Round wall installation tube, made of plastic, Ø 250 mm, length = 900 mm, with 2 blanking plugs, for retrofitting
- Square wall installation tube, made of EPP, 268 x 268, length = 600 mm, with 2 blanking plugs, for new builds
- Extension set for ComfoAir 70, made of EPP, with 2 blanking plugs, outside diameter 250 mm, length = 300 mm. For wall thicknesses greater than 600 mm, in combination with round wall mounting pipe length = 900 mm
- External Zehnder ComfoLED electronic control panel
- Humidity sensor board (optionally factory-fitted), humidity and VOC sensor board, humidity and CO2 sensor board

Sound specifications

Noise level at a distance of 3 m, open space[1)]

	Unit without adjoining room connection	Unit with one adjoining room connection	Unit with two adjoining room connections
Fan speed 1	11.0 dB(A)	9.2 dB(A)	2.9 dB(A)
Fan speed 2	23.6 dB(A)	16.3 dB(A)	16.0 dB(A)
Fan speed 3	29.4 dB(A)	24.3 dB(A)	16.2 dB(A)
Fan speed 4	36.4 dB(A)	31.2 dB(A)	22.7 dB(A)

[1)] Measured by an independent testing laboratory, for Zehnder ComfoAir 70 with outside wall panel and reveal module

Sound transmission

	Weighted sound reduction index Rw [dB]	Weighted normalised level difference Dn [dB]
Unit with outside wall panel		
Shutter open	17	40
Shutter closed	25	48
Unit with reveal module		
Shutter open	23	46
Shutter closed	23	46

Operation data				
	Volume flow [m³/h]	Thermal efficiency [%]	Humidity efficiency [%]	Power consumption [W]
Standby				< 1
Fan speed 1	15	90	84	4
Fan speed 2	25	83	73	5
Fan speed 3	40	76	61	9
Fan speed 4	60	71	54	17

Pressure loss graph

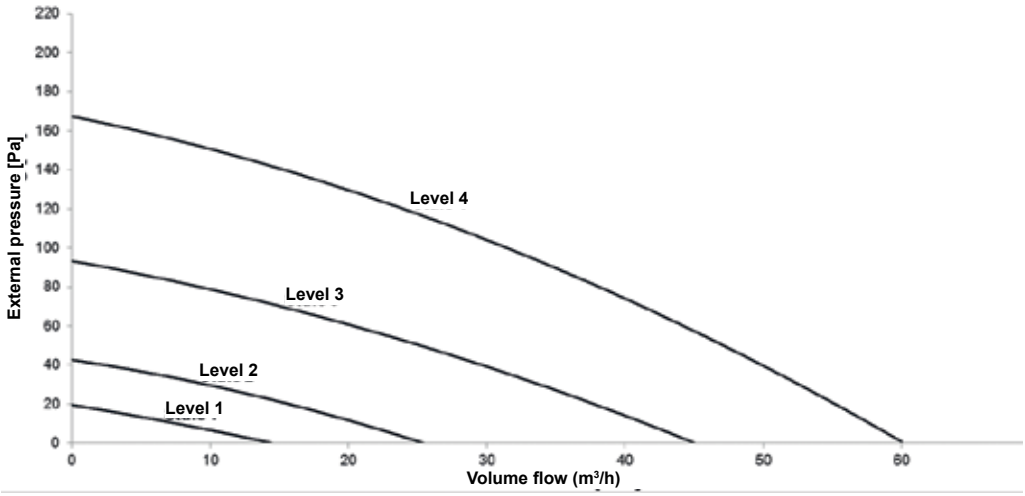

Energy efficiency classes

Energy efficiency classes in accordance with EU Regulation no. 1254/2014.

Energy efficiency classes					
Comfort ventilation unit	Article number	Control according to site requirements			Manual control[1)]
		Humidity sensor board 527 007 260	Humidity and CO sensor board 527 007 270	Humidity and CO_2 sensor board 527 007 280	No further accessories
ComfoSpot 50	527 007 210 527 007 220 527 008 580 527 008 770		A		A [1.2)]

[1)] The control is integrated in the ventilation unit
[2)] Energy efficiency class applies in combination with one or two adjoining room connections.
Energy efficiency class B without adjoining room connection

Dimensional drawings

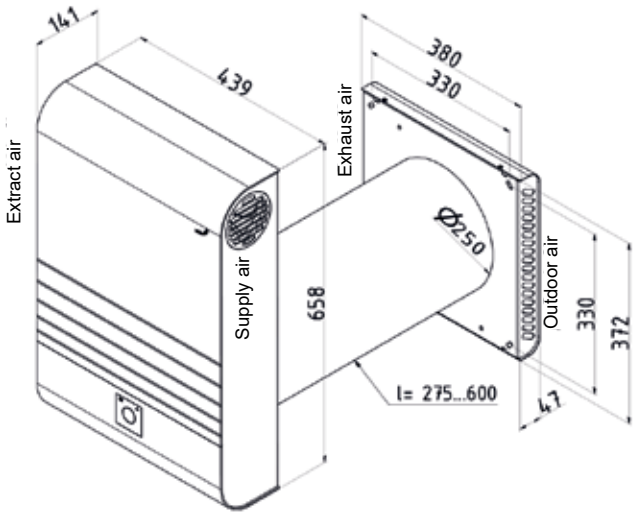

ComfoAir 70

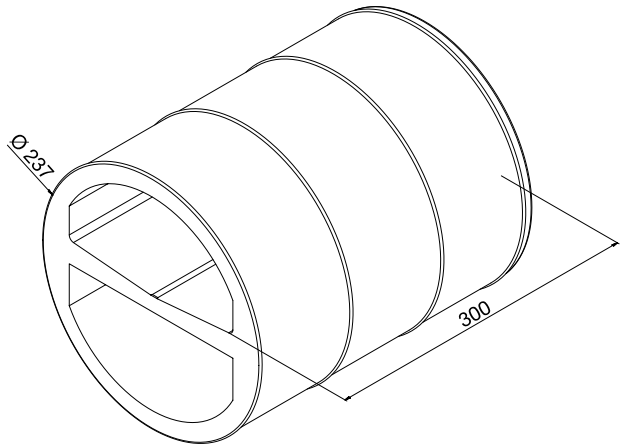

Extension set

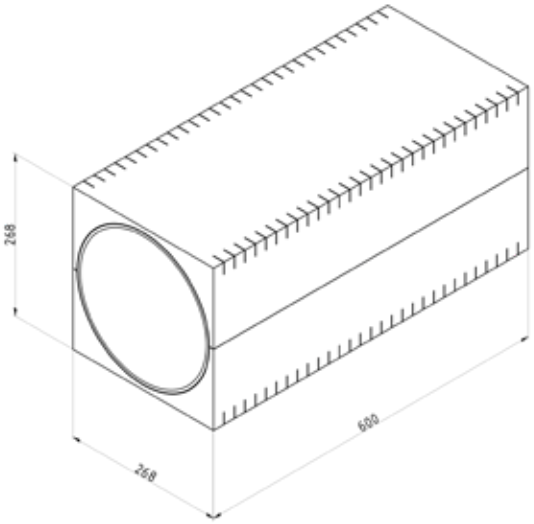

Square structural shell

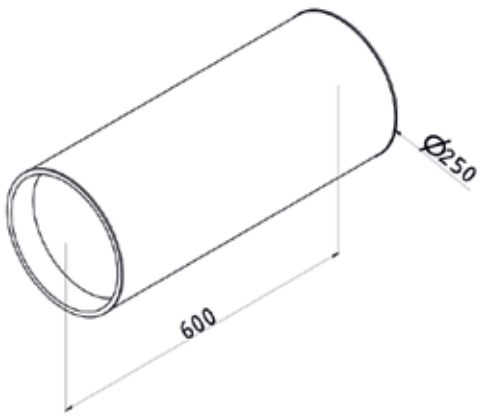

Structural shell set round L = 600 mm
(also available with L = 900 mm)

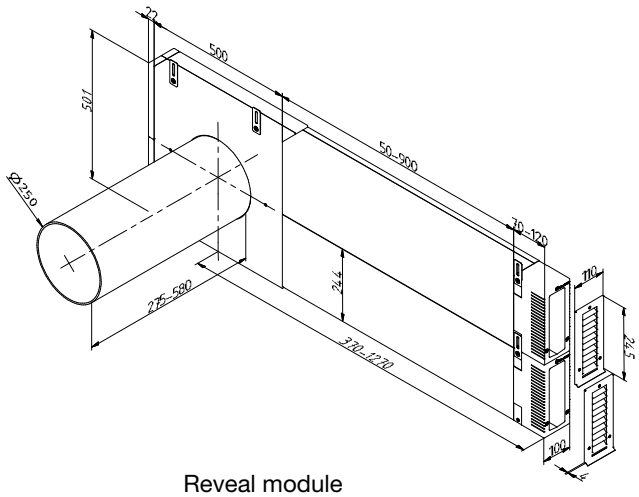

Reveal module

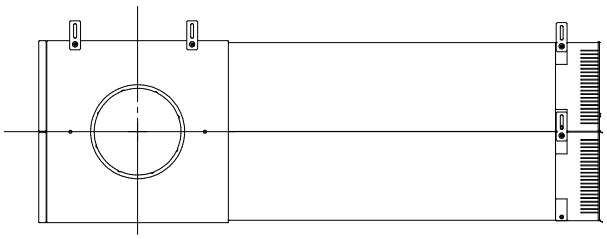

Reveal module, frontal

ComfoAir 70 Declaration of Performance

Product data sheet for RVUs as per EU Regulation No. 1254/2014 Contains information requirement for RVUs as per EU Regulation No. 1253/2014 Room ventilation unit Zehnder ComfoAir 70												
Supplier's name or trademark	Zehnder Group			Zehnder Group								
Supplier's model identifier	ComfoAir 70 (without adjoining room connection)			ComfoAir 70 sensor technology (without adjoining room connection)								
SEC [kWh/(m²a)] specific energy consumption (cold, average, warm)	-66.4	-32.9	-11.1	-76.3	-40.0	-16.6						
SEC class	A+	**B**	E	A+	**A**	E						
Type of ventilation unit	Bidirectional RVU			Bidirectional RVU								
Type of drive installed	Multi-stage drive			Speed control								
Type of heat recovery system	Recuperative			Recuperative								
Thermal efficiency [%]	76			76								
Maximum air volume flow rate [m³/h]	60			60								
Electric power input [W]	17			17								
Sound power level [dB(A)]	47			47								
Reference air volume flow rate [m³/h]	42			42								
Reference pressure difference [Pa]	0			0								
SPI [W/(m³/h)]	0.21			0.21								
Control factor and control typology	1 Manual control			0.65 Control according to site requirements								
Declared maximum internal and external leakage rates [%]	Internal: 0.1			Internal: 0.1								
	External: 0.9			External: 0.9								
Mixing rate	U1			U1								
Position and description of visual filter warning	Warning on the unit display			Warning on the unit display								
Internet address for assembly and disassembly instructions	www.zehnder-systems.de www.international.zehnder-systems.com			www.zehnder-systems.de www.international.zehnder-systems.com								
Airflow sensitivity to pressure variations [%]	< 10			< 10								
Indoor/outdoor air tightness [m³/h]	to the outside: 5.2 to the inside: 6.9			to the outside: 5.2 to the inside: 6.9								
AEC [kWh/a] annual electricity consumption (cold, average, warm)	871	334	289	704	167	122						
AHS [kWh/a] annual heating saved (cold, average, warm)	7,941	4,060	1,836	8,517	4,354	1,969						

ComfoAir 70 Declaration of Performance

Product data sheet for RVUs as per EU Regulation No. 1254/2014 Contains information requirement for RVUs as per EU Regulation No. 1253/2014 Room ventilation unit Zehnder ComfoAir 70												
Supplier's name or trademark	Zehnder Group			Zehnder Group Ze			hnder Group			Zehnder Group		
Supplier's model identifier	ComfoAir 70 (1 adjoining room connection)			ComfoAir 70 sensor technology (1 adjoining room connection)			ComfoAir 70 (2 adjoining room connection)			ComfoAir 70 sensor technology (2 adjoining room connection)		
SEC [kWh/(m²a)] specific energy consumption (cold, average, warm)	-68.5	-34.3	-12.1	-77.5	-40.8	-17.1	-68.5	-34.3	-12.1	-77.5	-40.8	-17.1
SEC class	A+	**A**	E	A+	**A**	E	A+	**A**	E	A+	**A**	E
Type of ventilation unit	Bidirectional RVU			Bidirectional RVU			Bidirectional RVU			Bidirectional RVU		
Type of drive installed	Multi-stage drive			Speed control			Multi-stage drive			Variable speed drive		
Type of heat recovery system	Recuperative			Recuperative			Recuperative			Recuperative		
Thermal efficiency [%]	76			76			76			76		
Maximum air volume flow rate [m³/h]	50			50			50			50		
Electric power input [W]	17			17			17			17		
Sound power level [dB(A)]	42			42			34			34		
Reference air volume flow rate [m³/h]	36			36			36			36		
Reference pressure difference [Pa]	50			50			50			50		
SPI [W/(m³/h)]	0.21			0.21			0.21			0.21		
Control factor and control typology	1 Manual control			0,65 Control according to site requirements			1 Manual control			0.65 Control according to site requirements		
Declared maximum internal and external leakage rates [%]	Internal: 0.1			Internal: 0.1 In			Internal: 0.1			Internal: 0.1 In		
	External: 0.9			External: 0.9			External: 0.9			External: 0.9		
Mixing rate	-			-			-			-		
Position and description of visual filter warning	Warning on the unit display			Warning on the unit display			Warning on the unit display			Warning on the unit display		
Internet address for assembly and disassembly instructions	www.zehnder-systems.de www.international.zehnder-systems.com			www.zehnder-systems.de www.international.zehnder-systems.com			www.zehnder-systems.de www.international.zehnder-systems.com			www.zehnder-systems.de www.international.zehnder-systems.com		
Airflow sensitivity to pressure variations [%]	-			-			-			-		
Indoor/outdoor air tightness [m³/h]	-			-			-			-		
AEC [kWh/a] annual electricity consumption (cold, average, warm)	845	308	263	693	156	111	845	308	263	693	156	111
AHS [kWh/a] annual heating saved (cold, average, warm)	8,091	4,136	1,870	8,614	4404	1,991	8,091	4,136	1,870	8,614	4,404	1,991

versatile

Versatile Group
Beechmount Home Park,
Navan, Co. Meath, C15 WR60

Email: info@versatile.ie
Phone: +353 (0)46 9029444