Versatile

Sanus 500/700/900 & 1100

Technical specification

always the best climate

Application

Decentralized self-regulating heat recovery unit, high efficiency and performance, for room-by-room applications such as classrooms, day nurseries, offices, shops, etc.

Monobloc and compact unit, full visible or recess under false ceiling via an included a patented mounting frame. Access from below to all components, including filter change.

All internal components are factory mounted and programmed according to the chosen configuration. It's our PLUG&PLAY - SET& FORGET™ concept !

Aluminum counterflow heat exchanger with over 90% efficiency (EN308), compliant ErP Directive 2009/125/EC and with French regulation RE2020.

Air filtration and temperature management for optimal comfort and IAQ.

Benefits for the user

Ideal for installation in false ceilings, with its patented mounting system and for renovations, as it requires no mains supply.
Based on 4 patented innovations: support framekit, removable panels, internal damper system, mobile and articulated hinges.
Access to all components from below via opening panels.
Condensate drain tray for heat exchanger and coils (CO and DXR) and heat exchanger are removable for easy maintenance.
Optimal inside air quality thanks to possible dual filtration on fresh air (ePM1 55% [F7] + ePM10 50% [M5] or ePM1 80% [F9]). Included ePM10 50% [M5] filter for exhausted air.
Silent operation is ensured by double-skinned panels with high-density thermal insulation (25 mm mineral wool). Thermal class T3 and airtightness class L2 in accordance with EN 1886.
User interfaces installed as standard with remoting possibility. Flexible and easy connection to BMS with on-board communication protocols (Modbus, BACnet and Web)
Solution complying with the requirements of the ErP Directive 2018.

Range

The Sanus ™ range is available in 4 sizes which cover airflows from 100 m³/h to 1 100 m³/h and in 4 versions:

FIRST : unit used for temperate climatic zones, with dynamic temperature management to optimize energy consumption and comfort.
SMART : unit equipped with an electric preheater for outdoor temperature compensation down to -10°C.
PREMIUM : unit equipped with either an electric (BE) or hot water (BC) heating coil. Find out more about the performance of the Sanus hot water coil (BC) in our SOFTWAIR softwares

INFINITE : unit equipped as standard with an electric preheater and a heater for outdoor temperatures down to -20°C.

Airflow modulation

The EASY 5.0 control system is used to control the airflow, guaranteeing optimum energy consumption (RE 2020, EN 15232).

DIVA : proportional fan speed modulation on CO2 levels.

Counterflow heat exchanger

High efficiency counterflow aluminum plate heat exchanger.

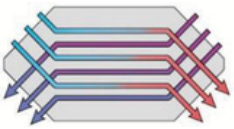

Eurovent-certified in accordance with the AAHE program, efficiency over 90% (EN 308).

Automatic frost prevention via 100% self-regulating and modulating internal bypass (except SEASON, On/Off), via self-regulating electric preheater for SMART and INFINITE versions, and possible fresh airflow modulation (included controller option).

Fan motor

DC motor with high-efficiency electronic commutation (EC), thermal protection and integrated speed control. EC technology is an eco-friendly™ solution which brings low energy consumption and allows operating point monitoring, managing and controlling (airflow modulation from 10 to 100%). Low noise level for greater acoustic comfort.

Constitution

The Sanus ™ range features the Eurovent certified AIRFLAT™ self-supporting model box (L1/D1/T3/TB3/F9) in accordance with EN1886.

10/10th double-skin panels and 25 mm of M0 (A2-S1) high-density 60 kg/m3 mineral wool insulation
Exterior panels in RAL 9010 coated steel with protective film and interior in galvanized steel
Unit fitted as standard with dual seal round spigot on intake and outlet panels to guarantee network sealing. Complaint with French CSTB ATEx n°13-224-V2).
Removable panels for a wide range of air inlet/outlet configurations. This removable panel system is patented. It allows the unit to be installed in a variety of ways, makes it easy to assemble, and protects the spigot during transport and handling.
Patented mounting frame for easy ceiling installation.
EASY 5.0 technical cabinet including electrical and control components.
Access via a lockable panel mounted on mobile, articulated hinges using a patented system, opening from underneath for easy maintenance and access to filters and unit components.
Condensate drain trays inclined and removable for drainage by capillary action or via an optional pump.
100% internal bypass, self-regulating and modulating (summer/winter management by thermostat and on/off opening).
Patented internal damper system isolates the unit from the fresh air in the event of a shutdown.
Specific ventilation louvre for height and width air diffusion optimization

Filters

As standard, the Sanus ™ unit features factory-mounted filters that ensure an optimal indoor air quality.

Fresh Air

Filter ePM1 55 % [F7] + optional double filtration stage (ePM10 50 % [M5] or ePM1 80 %[F9])

Extracted Air

Filter ePM1 55 % [F7]

Filters are always mounted on slides for easy replacement, and ahead for components protection.

Equipment and functions

The FIRST SMART, PREMIUM and INFINITE versions are supplied as standard with an EASY 5.0 control system, communicating via MODBUS, BACNET or WEB (choice of language can be activated on site). It includes a PG 5.0 touchscreen control (IP54 protection class) for simple and direct access to parameters and functions.

EASY 5.0 can be optionally fitted with an USER room remote touch control EDT2, featuring a user interface and display for the main functions (temperature control, restart, fault...) (remote control up to 100 m).

Internal timers for scheduled operation with 2 different airflows, programmable as required on site.
Weekly and vacation schedule.
Fresh air filter pressure switch with error feedback on the touchscreen control.
Airflow pressure switch for each fan, with error feedback on the touchscreen control.
Lockable main power cut-off switch and power cable pass-through integrated near the fresh air duct.

100% internal bypass, equipped with automatically controlled servomotors by the integrated control system, providing FREE-COOLING, FREE-HEATING and NIGHT-COOLING functions.

FREE COOLING : In summer, when the outdoor temperature is lower than the set indoor temperature, the bypass opens progressively until it is fully open. In this way, fresh air is supplied to the building, bypassing the heat exchanger. If this function is not sufficient to reach the set temperature, the optional cooling coil is activated.
FREE HEATING : Mainly in the off-season, when the outside temperature is higher than the set inside temperature, the bypass opens gradually until it is fully open and warm fresh air can be supplied to the building. If this function is not sufficient to reach the set temperature, the optional heating coil is activated.

NIGHT COOLING : the Night Cooling function lowers the building's indoor temperature according to the weather conditions of the last 24 hours. For example, between midnight and 7 a.m. (adjustable time range), the Night Cooling function is activated if the outdoor temperature has exceeded 22°C (adjustable value) during the day (between 6 a.m. and 10 p.m.). The Night Cooling function is activated if the outdoor temperature is between 10 and 18°C (adjustable value) and the extract air temperature is above 18°C (adjustable value).

4 temperature control modes to guarantee optimal energy consumption (RT2012, EN15232).

Constant supply air temperature: Keeps the supply temperature at the setpoint.
Supply air temperature adjustable according to outdoor temperatures : Outdoor conditions considered.
Constant extract air temperature : Extract temperature management acting in cascade on the supply temperature.
Extracted air temperature adjustable according to outdoor temperatures : Outdoor conditions considered.

Fire safety function to control supply and extract fans according to 5 available modes in the control parameters (function can be activated on site). A pictogram of a fire alarm is displayed on the screen:

Stop : Complete unit shutdown.
Continue : Continuous start-up or operation of the unit without taking time schedules into account.
Under normal start/stop conditions : Maintains the unit according to the schedule and parameters set on site.
Supply only : Start or maintain supply air fan (extract at stop).
Extract only : Start or maintain extract air fan (supply at stop).

Moreover, the Sanus ™ features an "External Stop" digital input that enables a manually operated control (to be connected on site). In this case, the external control takes priority over any fire safety activated by one of the 5 modes above.

Configuration and installation

The Sanus ™ has no roof. It must be installed exclusively indoors, on a ceiling (with or without false ceiling). It is designed for suspended mounting using threaded rods, thanks to a patented mounting frame which also serves as a mounting pattern.

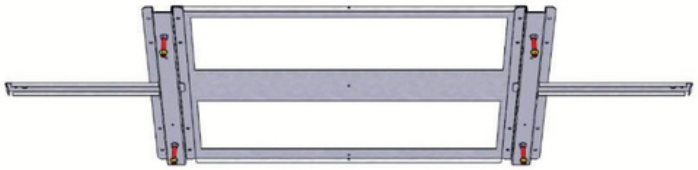

For maintenance, access to all internal components is from the unit underneath. The unit has 3 independent, hinged doors for easy maintenance and access to filters and all unit components.

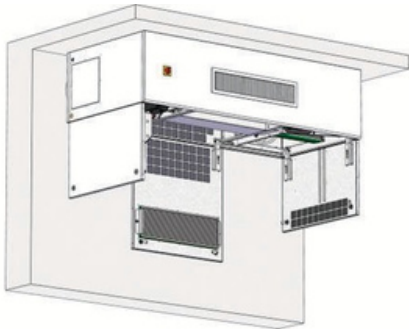

T

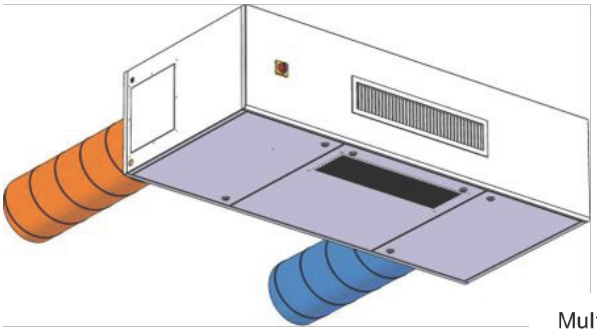

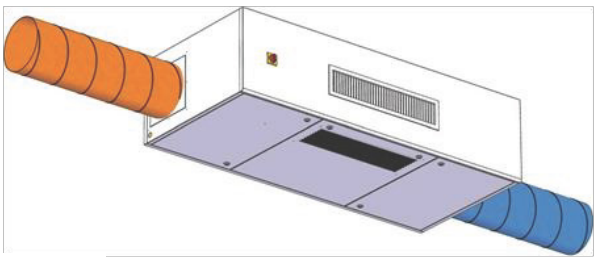

Multi-configuration connections
as standard
Fresh air / Exhaust air

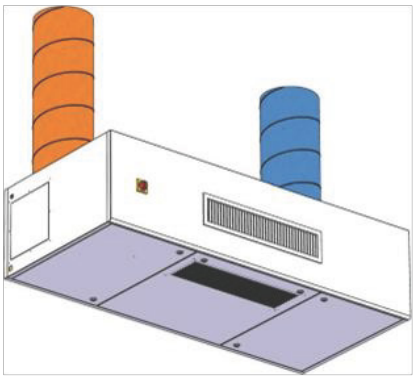

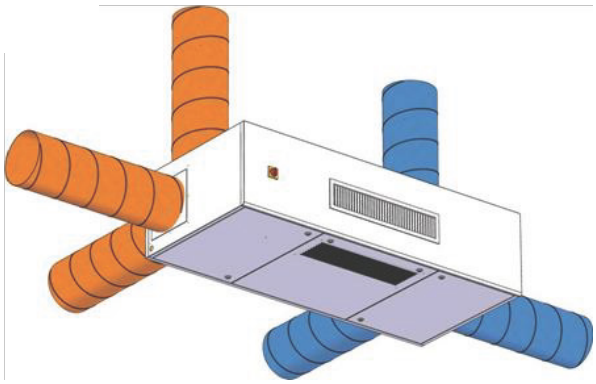

Climatic version

The Sanus ™ features finishes to ensure optimal climatic comfort (except SEASON). These features are managed automatically by the "EASY 5.0" control system. The sensors needed to regulate the coils and fans built into the unit are factory-mounted, wired and tested to make the Eversky™ a true PLUG&PLAY - SET& FORGET™ unit:

Temperature sensors (x4) integrated into the unit: supply, extract, frost prevention by bypass, outdoor temperature and, for SMART and INFINITE versions, a sensor for the electric preheater.
Integrated anti-frost thermostat (THA) to protect the hot coil on PREMIUM/INFINITE CO. versions.
Integrated overheating safety thermostat (THS) with manual reset to protect preheater and heating coils on SMART, PREMIUM BE, INFINITE BE and INFINITE CO versions.

Unit versions with different coils

Sanus	Integrated coil (S)		
	Preheating	Heating	
	Electric	Electric	Water
FIRST	-	-	-
SMART	■	-	-
PREMIUM BE	-	■	-
PREMIUM BC	-	-	■
INFINITE BE	■	■	-
INFINITE BC	■	-	■

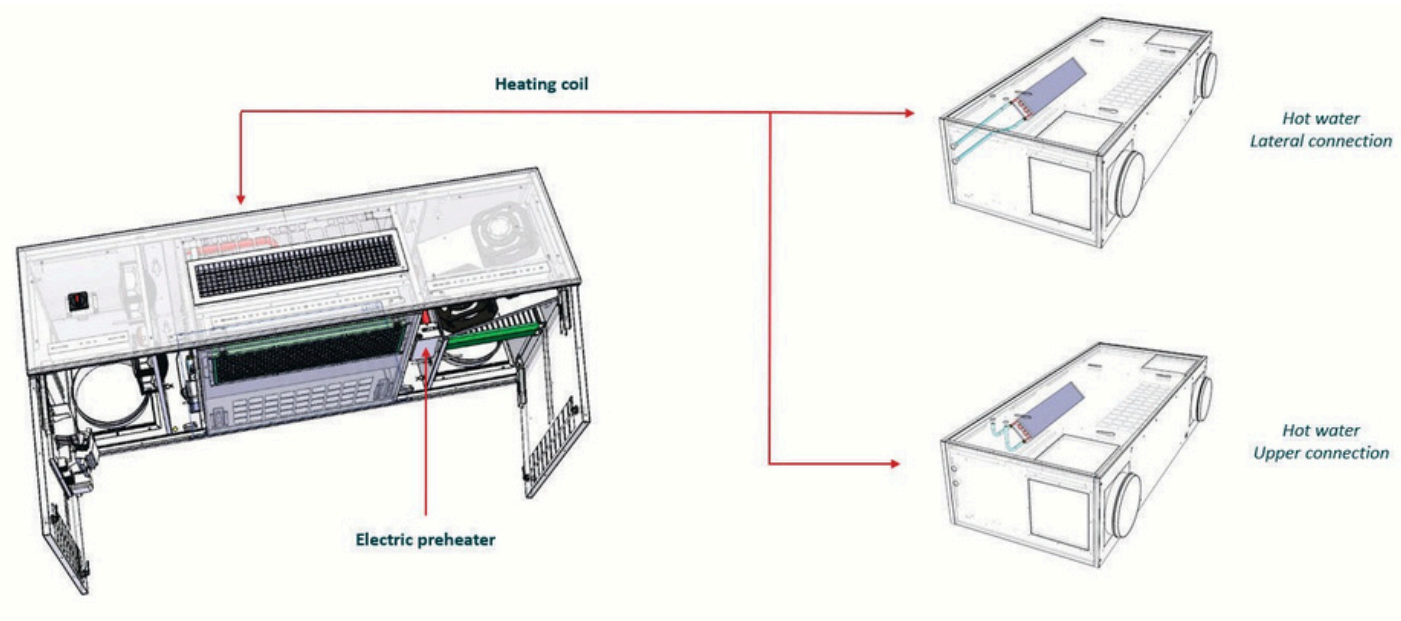

SANUS 1100M/Q D FIRST DIVA

SANUS Models	Ø	A	A1	A2	B	C	E	E1	E2	F	F1	M	M1	N	Weight
	mm	mm	mm	mm	mm	mm	mm	mm	mm	mm	mm	mm	mm	mm	kg
1100	315	2365	615	1085	1050	530	1924	220	280	1185	510	565	170	190	220
1100 M/Q	315	2405	615	1075	1425	560	1915	245	285	1185	530	900	190	235	240

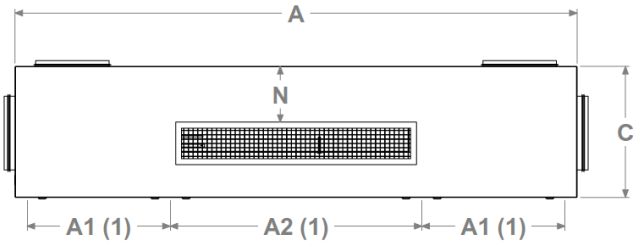

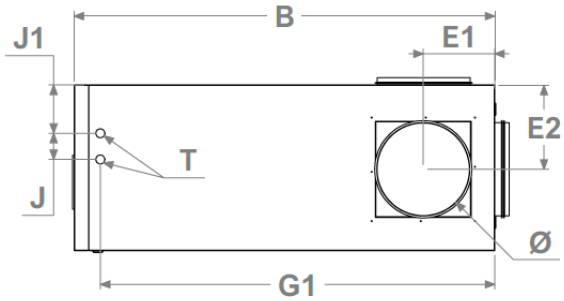

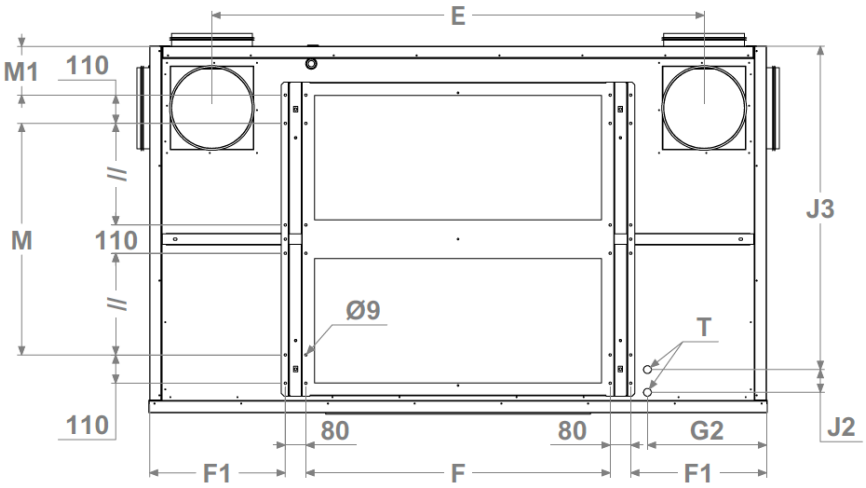

Electrical characteristics

					SMART / PREMIUM BE / INFINITE BC		FIRST / PREMIUM BC		INFINITE BE	
Sanus	Motor fan power (W)	Operation temp. (°C / °C)	IP Motor fan / Class	Thermal protection*	Voltage (V/Ph/Hz)	Protection intensity (A)	Voltage (V/Ph/Hz)	Protection intensity (A)	Voltage (V/Ph/Hz)	Protection intensity (A)
500	2 x 169	-25 / 60	IP54/B	PTI	230/1/50	7.0	230/1/50	2.7	230/1/50	11.4
750	2 x 170	-25 / 60	IP54/B	PTI	230/1/50	8.2	230/1/50	2.8	230/1/50	13.7
900	4 x 169	-25 / 60	IP54/B	PTI	230/1/50	10.8	230/1/50	5.3	230/1/50	16.3
1100	4 x 170	-25 / 60	IP54/B	PTI	230/1/50	11.0	230/1/50	5.5	230/1/50	16.5

** PTI : Integrated thermal protection*

Airflow modulation

Sanus ™ unit is equipped as standard with a factory-programmable control, which allows you to configure the following operating modes:

DIVA : proportional fan speed modulation on CO2 levels

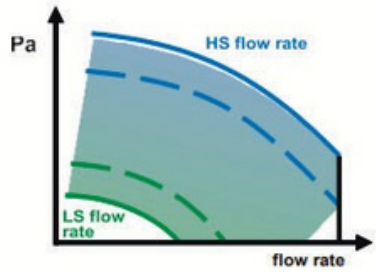

EASY 5.0 : MASTER touchscreen control in the Sanus ™ control cabinet, which can be remoted as a wall-mounted control for setting clocks, airflows, temperature (self-regulating and modulating internal bypass, hot coil for BC versions or electric for BE versions, night-cooling), monitoring and checking errors...

EDT2 : USER room remote touch control, temperature setpoint offset, 120 min restart, or information display (fan speed and status, operating mode, external forcing, temperature setpoint, and alarms).

Equipment	FIRST	SMART	PREMIUM BE	PREMIUM BC	INFINITE BE	INFINITE BC
Low energy consumption EC motor fans	●	●	●	●	●	●
Fresh air filter, ePM1 55 % (F7)	●	●	●	●	●	●
Extract air filter, ePM10 50 % (M5)	●	●	●	●	●	●
High-efficiency (>90%) counterflow plate heat exchanger, EUROVENT-certified	●	●	●	●	●	●
100% internal by-pass	●	●	●	●	●	●
25 mm double skin, RAL9010	●	●	●	●	●	●
Dual seal round spigot (ATEC CSTB number 13-224-V2).	●	●	●	●	●	●
Communicative control via Modbus in RS485 or TCP/IP, BACnet IP, WEB TCP/IP (selectable)	●	●	●	●	●	●
Supply air temperature sensor	●	●	●	●	●	●
Extract air temperature sensor	●	●	●	●	●	●
By-pass frost prevention temperature sensor	●	●	●	●	●	●
Outdoor temperature sensor	●	●	●	●	●	●
Preheater temperature sensor	-	●	-	-	●	●
Water coil anti-frost thermostat (THA)	-	-	-	●	-	●
Electric preheater over-heating thermostat	-	●	-	-	●	●
Electric heater over-heating thermostat	-	-	●	-	●	-
Lockable main power cut-off switch	●	●	●	●	●	●
Power cable pass-through	●	●	●	●	●	●

● : Equipment or function as standard
■ : Equipment or function as an option. Supplied mounted and wired at the factory
◆ : Equipment or function as an option. Supplied unmounted

General characteristics

Function	FIRST	SMART	PREMIUM BE	PREMIUM BC	INFINITE BE	INFINITE BC
Frost prevention sequence: by-pass + coils (SMART/INFINITE) + fresh air modulation	●	●	●	●	●	●
Self-regulating electric preheater	-	●	-	-	●	●
Self-regulating electric heater	-	-	●	-	●	-
Self-regulating hot water coil	-	-	-	●	-	●
100% internal bypass, self-regulating and modulating (0-100%)	●	●	●	●	●	●
Gestion du Free Cooling	●	●	●	●	●	●
Régulation Night Cooling (surventilation nocturne)	●	●	●	●	●	●
Free Cooling management	●	●	●	●	●	●
Night Cooling management	●	●	●	●	●	●
Fan overheating prevention	●	●	●	●	●	●
Supply air temperature management	●	●	●	●	●	●
Extract air temperature management	●	●	●	●	●	●
Weekly schedule	●	●	●	●	●	●
Holidays and vacation schedule	●	●	●	●	●	●
Fresh air filter pressure switch	●	●	●	●	●	●

● : Equipment or function as standard
■ : Equipment or function as an option. Supplied mounted and wired at the factory
◆ : Equipment or function as an option. Supplied unmounted

Airflow modulation options	FIRST	SMART	PREMIUM BE	PREMIUM BC	INFINITE BE	INFINITE BC
DIVA : proportional modulation for each fan speeds	●	●	●	●	●	●

Futher options	FIRST	SMART	PREMIUM BE	PREMIUM BC	INFINITE BE	INFINITE BC
Condensate pump	◆	◆	◆	◆	◆	◆
USER room remote touch control (EDT2)	◆	◆	◆	◆	◆	◆
Room temperature management via touchscreen room controller	◆	◆	◆	◆	◆	◆

● : Equipment or function as standard
■ : Equipment or function as an option. Supplied mounted and wired at the factory
◆ : Equipment or function as an option. Supplied unmounted

Electric coil performance characteristics Sanus ™ 1100

BE for unit versions												Electric coi
Fresh airflow	**0 °C**	**-5 °C**	**-10 °C**	**-15 °C**	**-15 °C***	**0 °C**	**-5 °C**	**-10 °C**	**-10 °C***	**-10 °C**	**-15 °C**	**-15 °C***
(m^3/h)	1100		1100			1100				1100		
Version	FIRST		SMART Preheater coil			PREMIUM BE Heater coil				INFINITE BE Preheater + heater coil		
Power (kW)	-		1,25			1,25				1,25 + 1,25		
Outlet temperature (°C)	16,4	16,6	16,8	14,9	18,5	19.8	20	17,1	22,8	20,2	18,4	22,8

These data are provided for optimal control configuration according to the outdoor temperatures in question.
Continuous supply temperature of the unit, considering the opening of the self-regulating and modulating bypass to prevent frost on the heat exchanger.
* In the event of a 20% reduction in volumetric airflow.

Options

Climatic

Condensate pump kit ref. PRC ESI10 5ML NON MONTE
Direct connections to EASY controller and overflow safety management.

Filter F9 ePM1 80%

Filter M5 ePM10 50%

Controller

Wall-mounted touch screen USER ref. EDT2 100ML

Security and control

Air pressure switch ref. DEP
Extract air filter (IP54)

Trigger box ref. BD TBTS 24/48 Vcc
24 or 48 Vdc low-voltage box (IP67)

Airflow modulation

2 speed comfort remote control ref. CDC PVGV2
LS/HS, 2 fans, box (IP54)

2 speed comfort remote control ref. CDC 1V2
ON/OFF, 2 fans, box (IP54)

Installation

Flexible sleeve ref. MTS M0
Fire Class: M0
Male (network side) / Female (unit side) diameters

Versatile Group
Beechmount Homepark, Navan . Co. Meath
T 046 902 9444
sales@versatile.ie
www.versatile.ie